AM175-L

57" White Acrylic Corner Jetted Whirpool Bathtub w/ Fixtures

EAGO USA

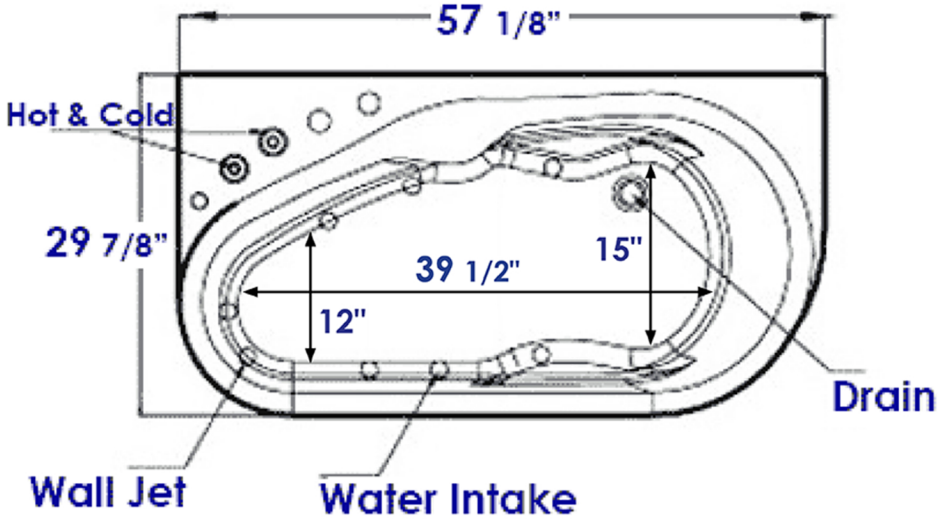

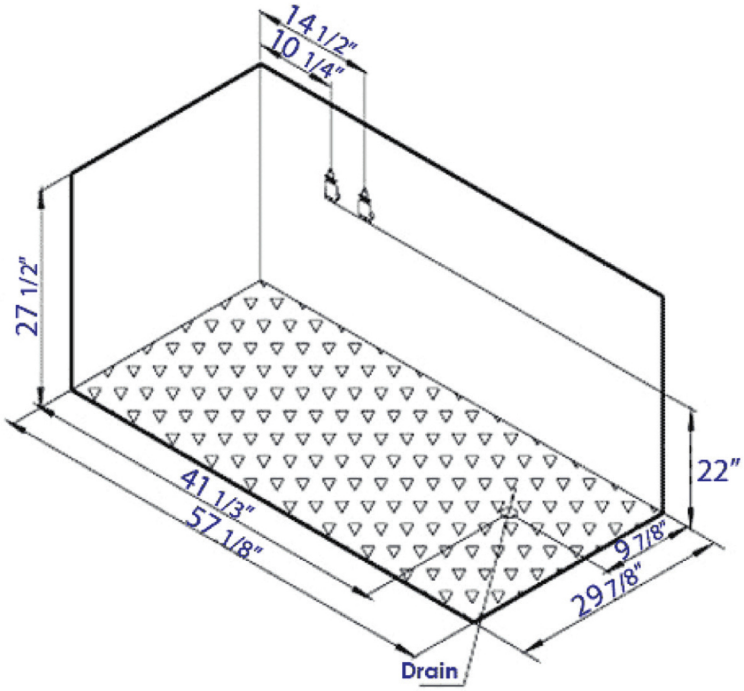

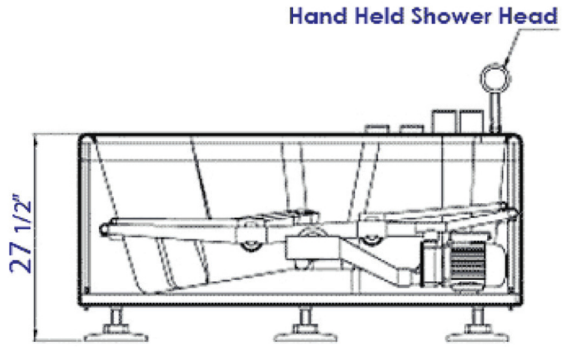

Note: All product dimensions are approximate and should be verified on site prior to installation.
Visit **www.EAGOUSA.com** for more information.

2017 EAGO USA All Rights Reserved. This material may not be reproduced, displayed, modified or distributed without the express prior written permission of the copyright holder.